PROFESSIONAL LOUDSPEAKERS

Made in Italy

8PR210
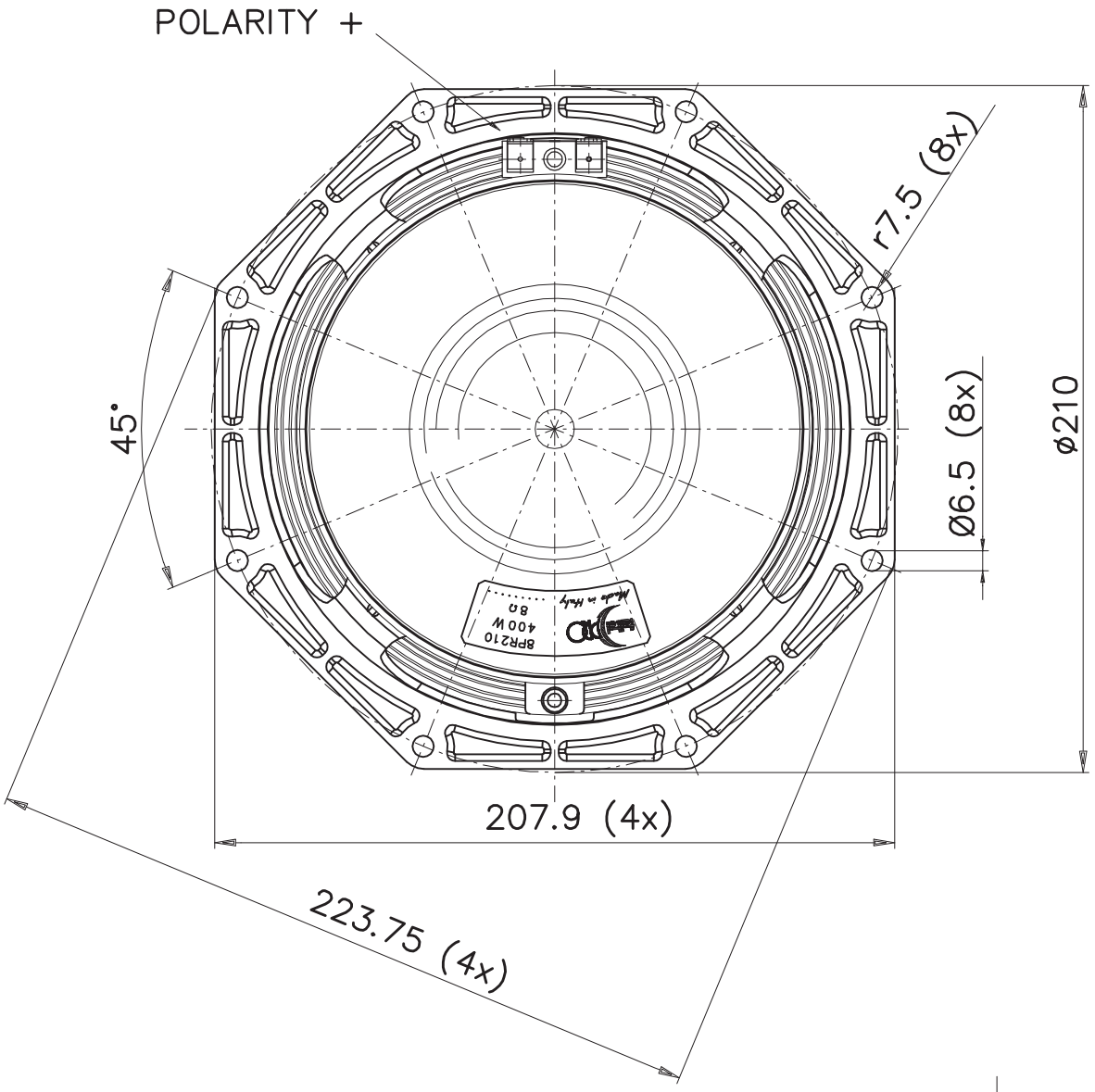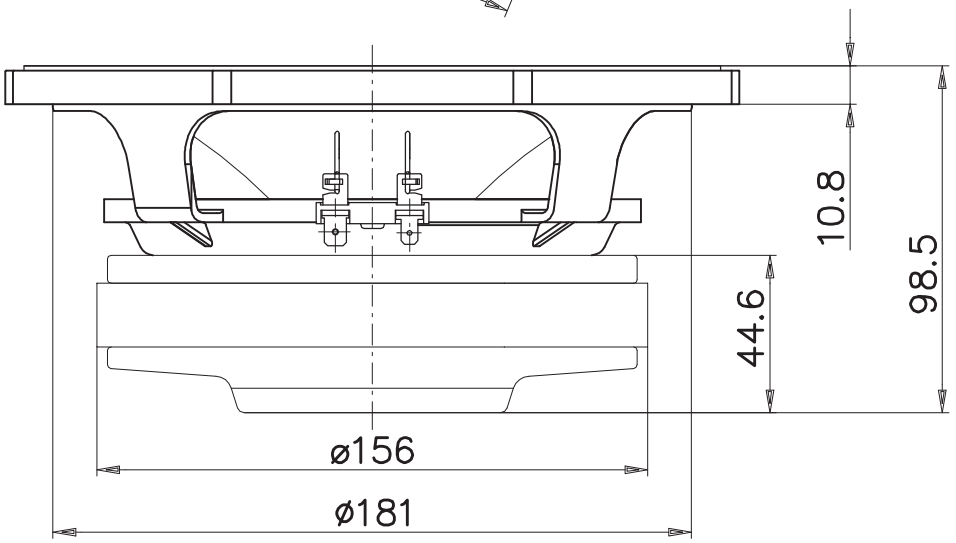
8” - 200 W - 95 dB - 8Ω