PROFESSIONAL LOUDSPEAKERS

15PR400

15" - 400 W - 99 dB - 8 Ohm



NOMINAL SPECIFICATIONS

Nominal Diameter	380 mm (15 in)
Overall Diameter	393 mm (15.47 in)
Bolt Circle Diameter	374 mm (14.72 in)
Baffle Cutout Diameter	356 mm (14.02 in)
Depth	165 mm (6.50 in)
Flange and Gasket Thickness	13.1 mm (0.52 in)
Net Weight	**3.6 kg (7.9 lb)**
Shipping Box (Single Carton Box)	430 x 427 x 236 mm (16.9 x 16.8 x 9.3 in)
Shipping Weight	4.7 kg (10.4 lb)

PART NUMBER

Push Terminals - 8 Ohm Version	03803827
Recone Kit - 8 Ohm Version	R3803827

TECHNICAL PARAMETERS

Nominal Impedance	8 Ohm
Minimum Impedance	5.9 Ohm
AES Power Handling **(1)**	400 W
Maximum Power Handling (2)	**800 W**
Sensitivity (1W/1m)	**99 dB**
Frequency Range	35÷4000 Hz
Voice Coil Diameter	**77 mm (3 in)**
Winding Material	Al
Former Material	Glass Fiber
Winding Depth	15 mm (0.59 in)
Magnetic Gap Depth	**10.5 mm (0.41 in)**
Flux Density	1.15 T
Magnet	Neodymium Slug
Basket Material	Aluminum
Demodulation	No
Cone Surround **(3)**	Accordion (4 waves)
NET Air Volume filled by Loudspeaker	3.7 dm^3 (0.131 ft^3)
Spider Profile	1x constant height waves

THIELE & SMALL PARAMETERS

Fs	35 Hz
Re	5.1 Ohm
Qes	0.34
Qms	6.0
Qts	0.32
Vas	248.9 dm^3 (8.79 ft^3)
Sd	857 cm^2 (132.84 in^2)
Xmax **(4)**	5.75 mm
Xdamage **(5)**	15.5 mm
Mms	85.2 g
Bl	16.7 N/A
Le	0.72 mH
Mmd	56.8 g
Cms	0.24 mm/N
Rms	3.1 kg/s
Eta Zero	3.02 %
EBP	103 Hz

NOTES:

(1) 2 Hours Test According to AES 2-1984 Rev. 2003

(2) Maximum power is defined as 3dB greater than nominal power.

(3) Treated Polycotton

(4) Xmax= [(winding depth - magnetic gap depth)/2] + (magnetic gap depth/3)

(5) Maximum excursion before permanent damage

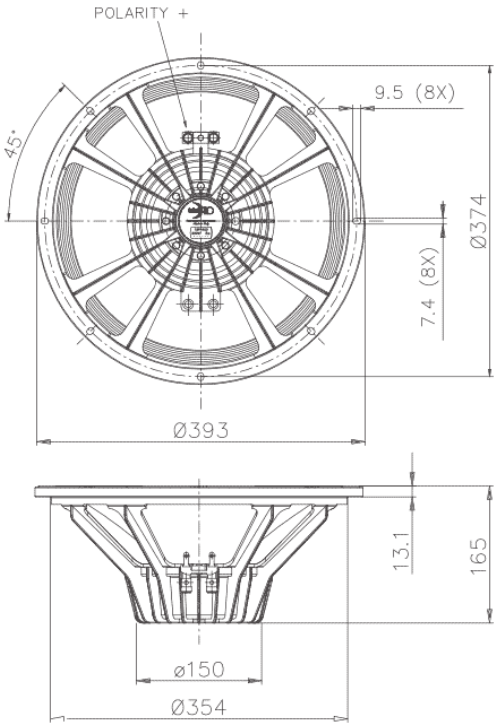

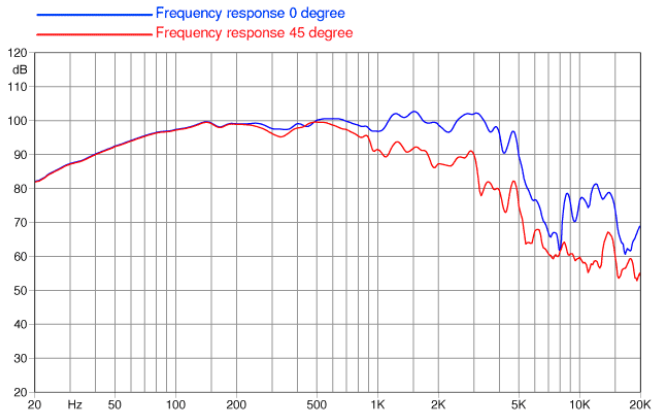

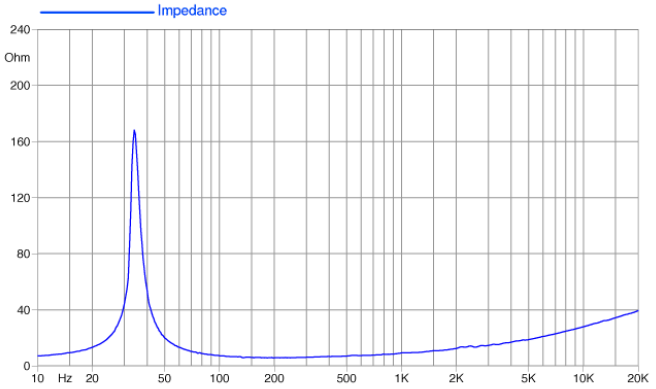

©Copyright 2026 **Faital S.p.A.** • All rights reserved.