PROFESSIONAL LOUDSPEAKERS

Made in Italy

10PR310
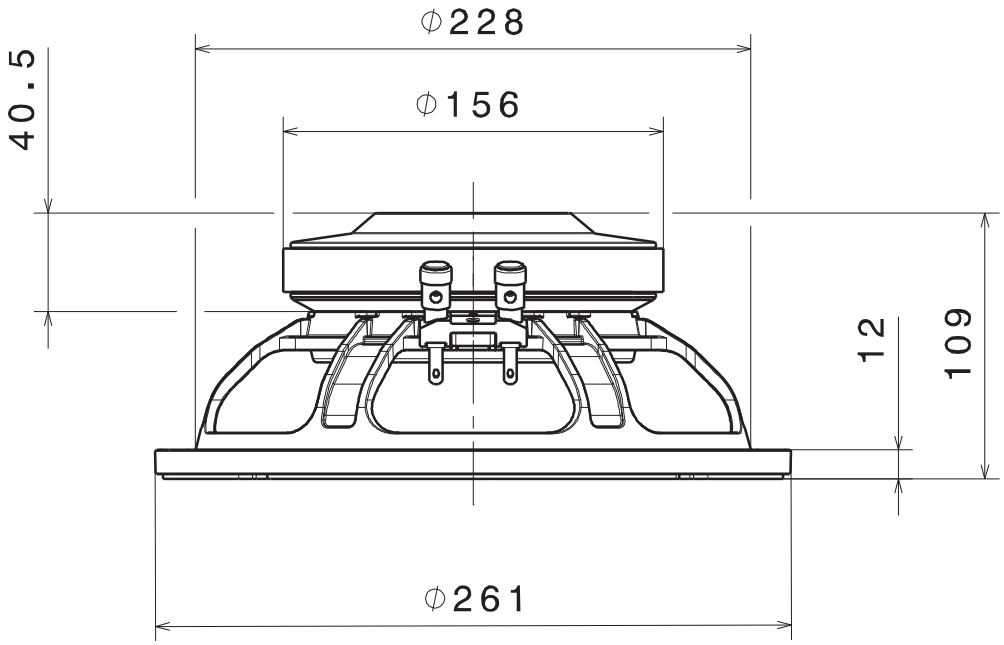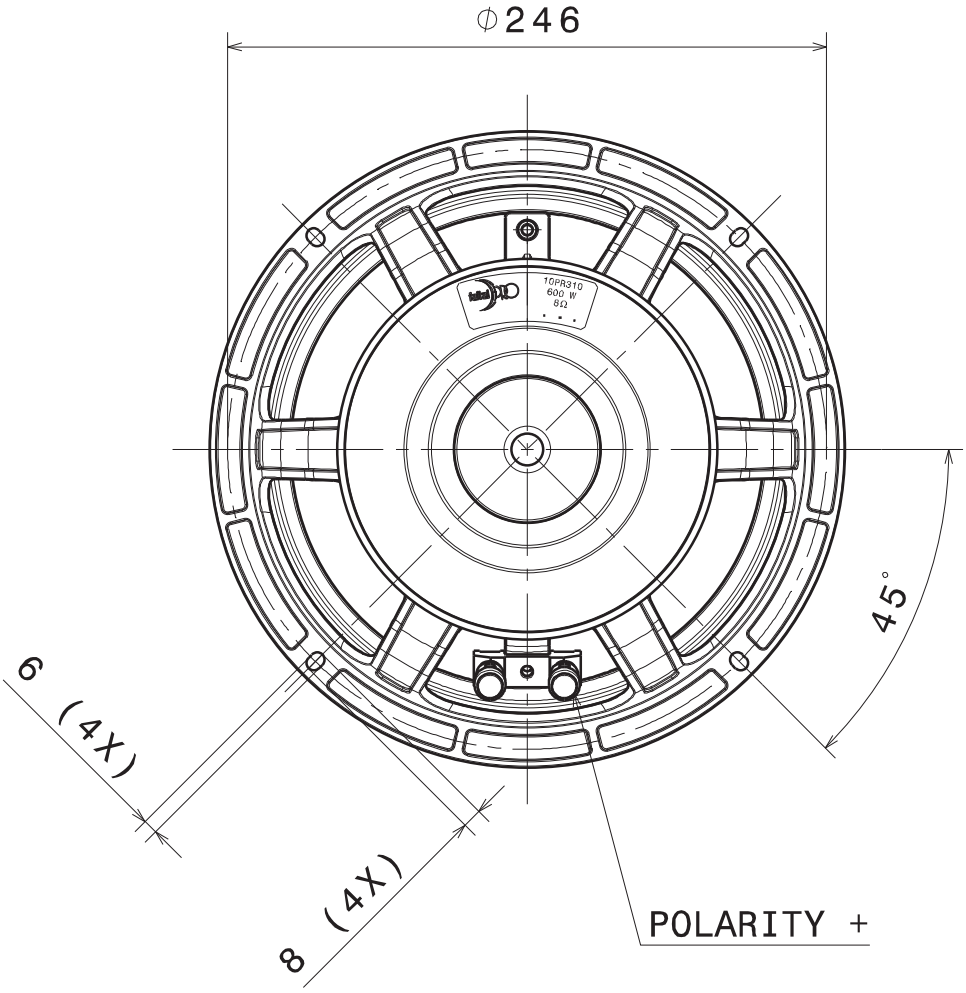
10” - 300 W - 98 dB - 8Ω